ASSEMBLY SHEET

E320

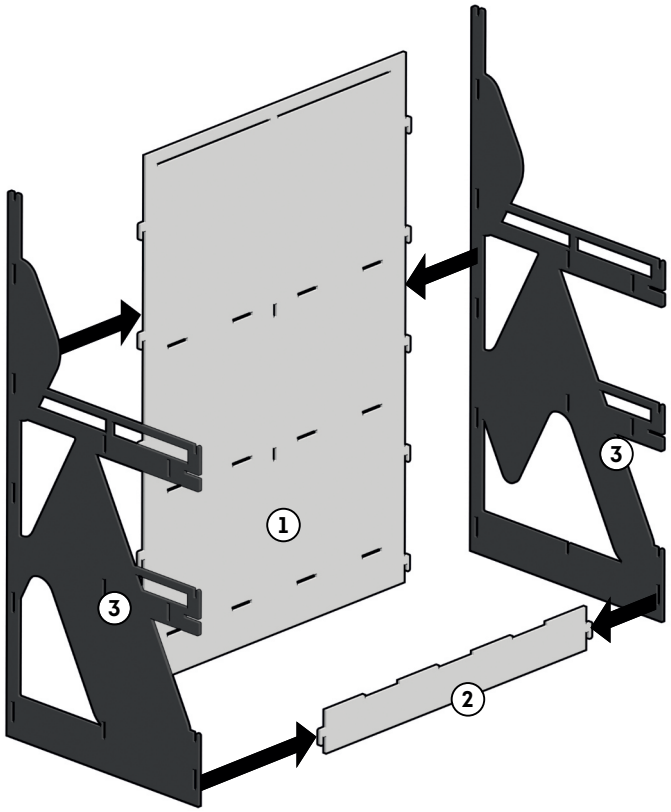

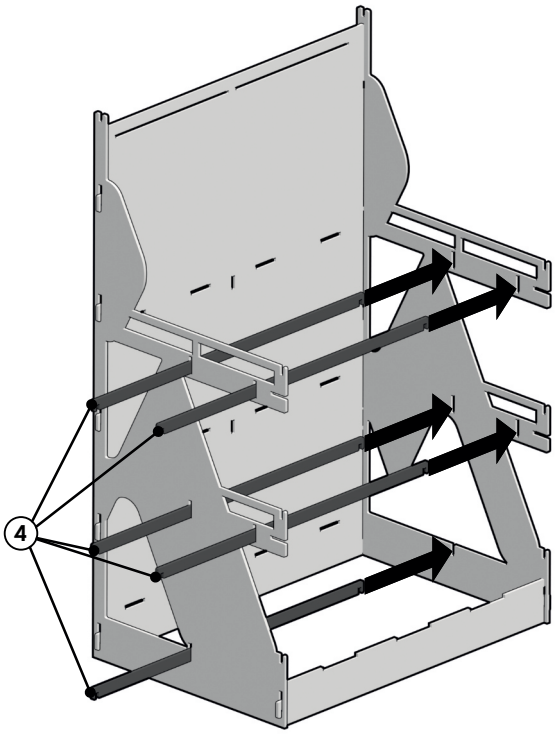

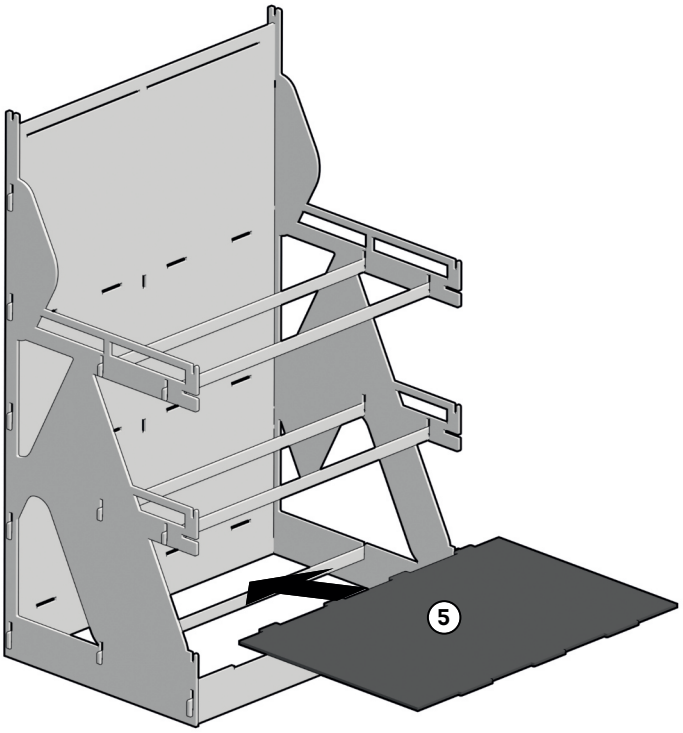

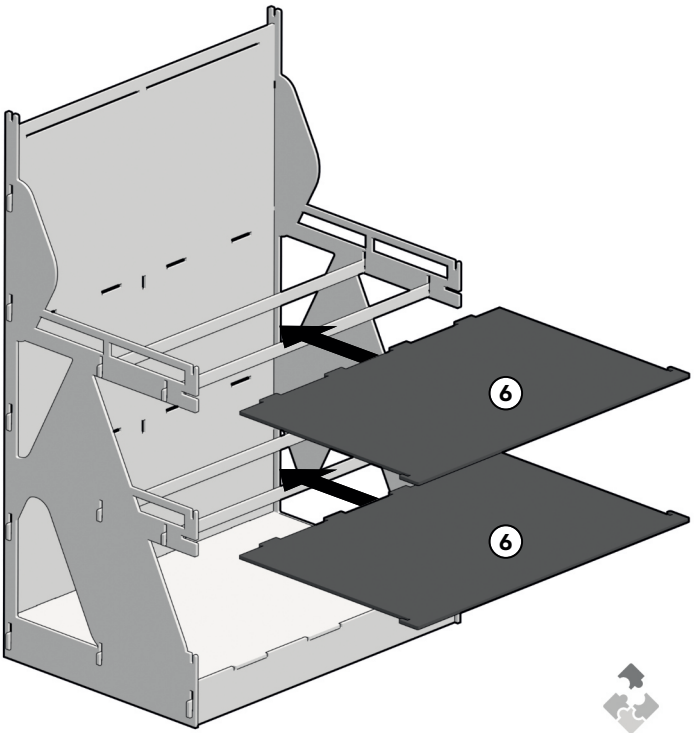

The use of a rubber mallet is recommended.
Respect the numbering for correct assembly.

EUROSUD CATALDI
FORNITURE E LAVORAZIONI IN LEGNO

SCHEDA DI MONTAGGIO

E320

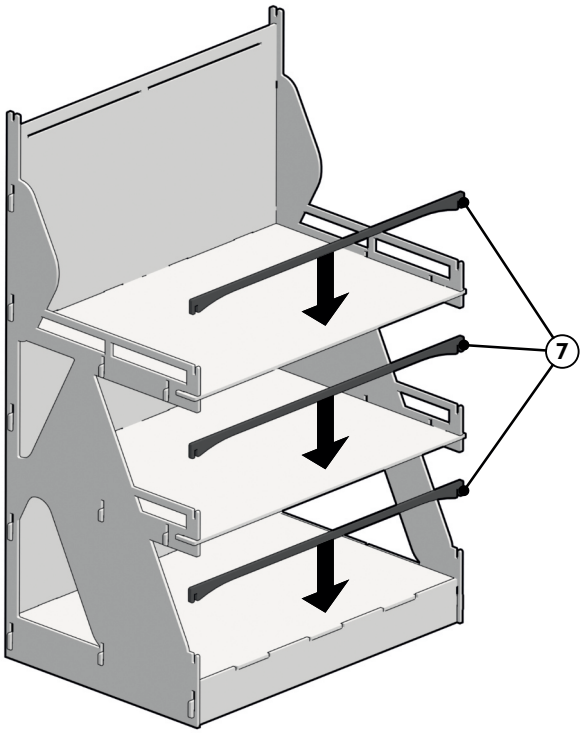

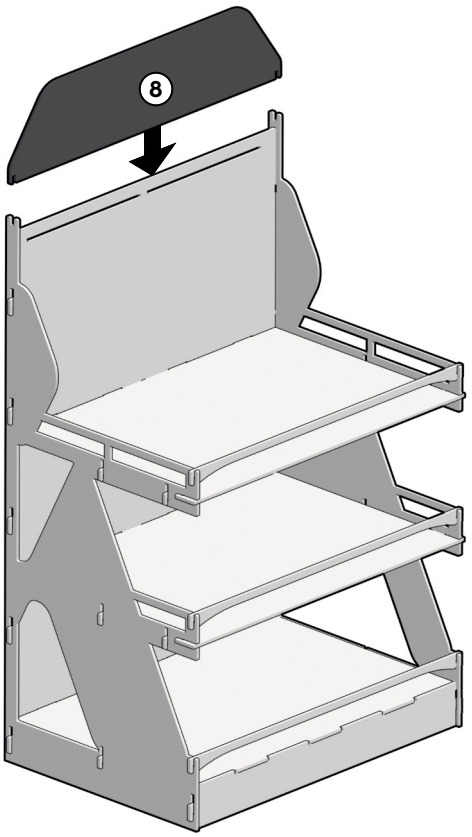

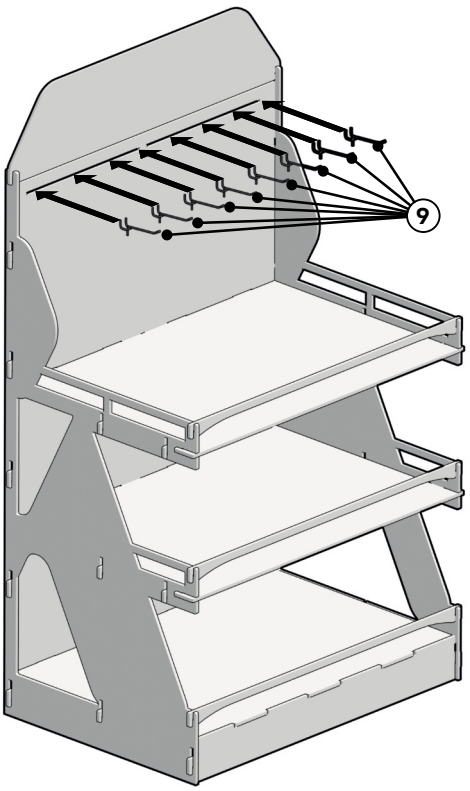

L'uso di un martello in gomma è raccomandato.
Rispettare la numerazione per un assemblaggio corretto.

EUROSUD CATALDI
FORNITURE E LAVORAZIONI IN LEGNO

WARNINGS

DANGERS

- Keep out of reach of children.
- Handle the display carefully to avoid the possible presence of splinters that can get under the skin.
- Pay attention to your hands and feet when assembling the wooden display to avoid crushing them.
- Remove any items from the display before moving it.
- If the furniture tips over it can cause serious or fatal crushing injuries.
- In the event of an accident, contact your doctor.

INFO

- Avoid assembling the display yourself, a minimum of two people is recommended.
- Clean with a cloth slightly dampened in water.
- Dry with a clean cloth.
- Keep away from heat sources.
- Do not get the display wet, water can severely damage the wood.
- Do not load the wooden display shelves beyond the recommended/indicated load.
- If the wood breaks, do not reuse it and place it in a safe environment away from children. Replace the damaged part.
- Do not replace or modify the display parts in any way with incompatible parts. If necessary, contact the authorized dealer.
- Do not expose the display to atmospheric agents. This could cause rapid deterioration of the materials. The wooden display was designed exclusively for indoor use.

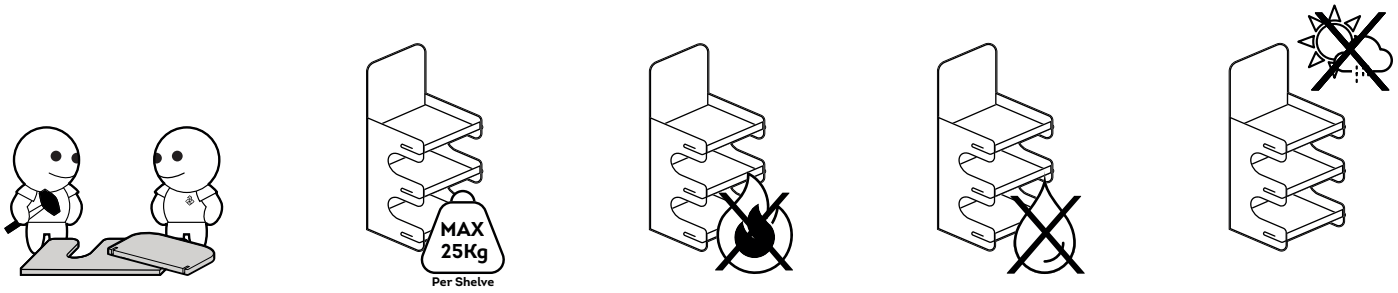

SUSTAINABILITY

- • For the disposal of materials it is recommended to follow what is indicated or see the directives of your municipality

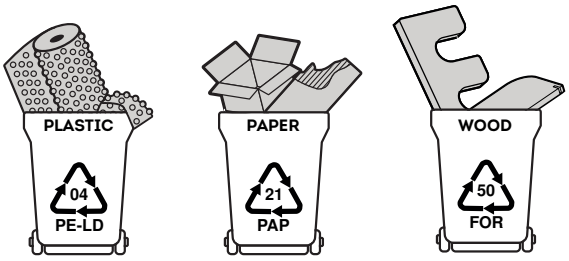

EUROSUD CATALDI
FORNITURE E LAVORAZIONI IN LEGNO

Designed and produced by
EUROSUD CATALDI SRL
Gravina in Puglia (BA)
Tel: +39 080 3221081
www.eurosudsrl.com